Install the tracker with bolts

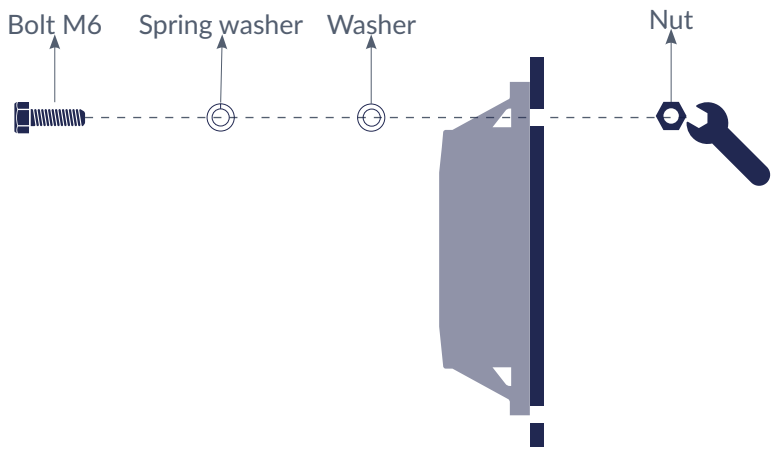

1. Use the appropriate size of screws, it is recommended to use the M6 type and to use thread locking glue on the bolts. We recommend Loctite Thread Locker Blue 242.

2. Protect the tracker casing appropriately: protect the casing with a washer and use a spring washer to mitigate the effects of vibration and temperature variations.

3. Don't apply too much torque during the fixation: the maximum allowed torque is 3.5NM for an M6 screw used with a washer. Applying more torque may severely damage the tracker's casing.

Install the tracker with rivets

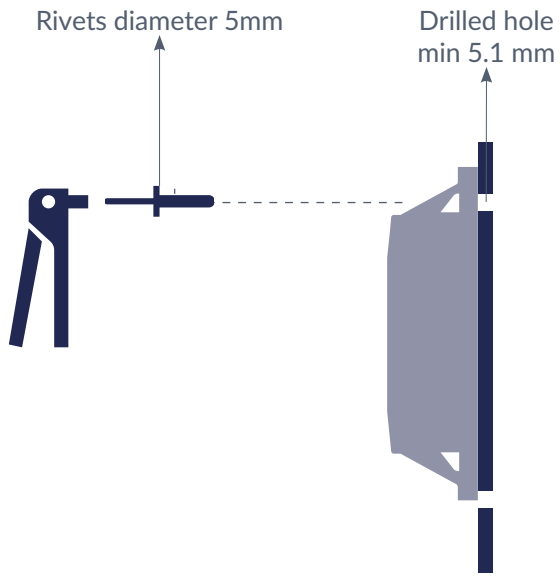

Use the **appropriate size** of rivets.

Choose the right **length** of the rivets.
The height of the casing where the mounting holes are located is 8mm.

We recommended to use rivets with a **diameter** of 5mm.

Other installation methods

For alternative fixation methods such as magnets, glue and double sided tape or tie wraps please contact the Sensolus Help Desk.

support@sensolus.com or +32.9.298.09.43

Installation advice

Avoid blocking the tracker's view with metal or carbonfibre walls. They weaken or block the radiofrequency signals.

Place the tracker has high as possible on the asset to ensure good network coverage.

Make sure the mounting surface is **flat and clean**, for a strong and durable bond.

Do not install the tracker on parts that receive frequent shocks or vibrations.

Install the tracker vertically, with the logo facing up.

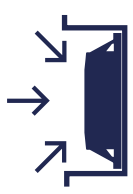

If your asset is handled in a rough environment, you can place the tracker in a protected location, but never with metal or carbonfibre above the tracker.

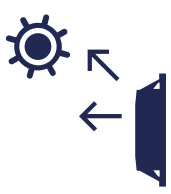

Make sure the tracker has a clear view on the sky.

Avoid placing the tracker in a place that can collect water.

If you can't install vertically, do **not** mount the tracker **upside down.**

Tracker activation

Activation of the trackers is preferably done with clear skies, and not inside (e.g. factory or warehouse).
Trackers are not activated when delivered to your premises.
Their subscription in the platform will start within six month of purchase.

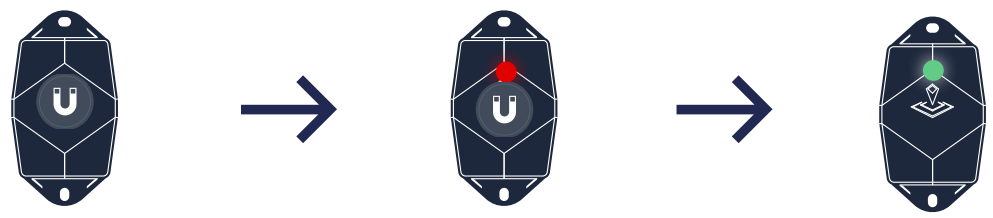

Hold a magnet for about 5 seconds on top of the logo on the asset tracker.

You will first see a **red LED**. Do not remove the magnet yet.

When the green LED is blinking you can remove the magnet. Your tracker is ready for use.

Troubleshooting

1. Put the magnet on the tracker for less than 5 seconds
2. The possible LED feedback options are:

Red LED:
Tracker is not activated

Green LED:
Tracker is activated and working properly

No LED:
tracker is not functioning (probably dead battery -> contact support)

Red LED is **blinking**:
Tracker is busy

Force new configuration download on the tracker

Hold a magnet for about **5 seconds** on top of the logo on the asset tracker.

You will see a green LED.

You will see a **red and green** LED.

Now remove the Magnet

Green LED is **blinking** for minimum 30 seconds.

Your tracker is checking for new configurations

You see a red LED:
No new configuration received

You see a green LED: New configuration setting received

Federal Communication Commission Interference Statement

This device complies with Part 15 of the FCC Rules. Operation is subject to the following two conditions: (1) This device may not cause harmful interference, and (2) this device must accept any interference received, including interference that may cause undesired operation.

This equipment has been tested and found to comply with the limits for a Class B digital device, pursuant to Part 15 of the FCC Rules. These limits are designed to provide reasonable protection against harmful interference in a residential installation. This equipment generates, uses and can radiate radio frequency energy and, if not installed and used in accordance with the instructions, may cause harmful interference to radio communications. However, there is no guarantee that interference will not occur in a particular installation. If this equipment does cause harmful interference to radio or television reception, which can be determined by turning the equipment off and on, the user is encouraged to try to correct the interference by one of the following measures:

- Reorient or relocate the receiving antenna.
- Increase the separation between the equipment and receiver.
- Connect the equipment into an outlet on a circuit different from that to which the receiver is connected.
- Consult the dealer or an experienced radio/TV technician for help.

FCC Caution: Any changes or modifications not expressly approved by the party responsible for compliance could void the user's authority to operate this equipment.

This transmitter must not be co-located or operating in conjunction with any other antenna or transmitter.

Radiation Exposure Statement:
This equipment complies with FCC radiation exposure limits set forth for an uncontrolled environment.
This equipment should be installed and operated with minimum distance 20cm between the radiator & your body.